MOLLI | TABLE LAMP | BLACK

2112825003

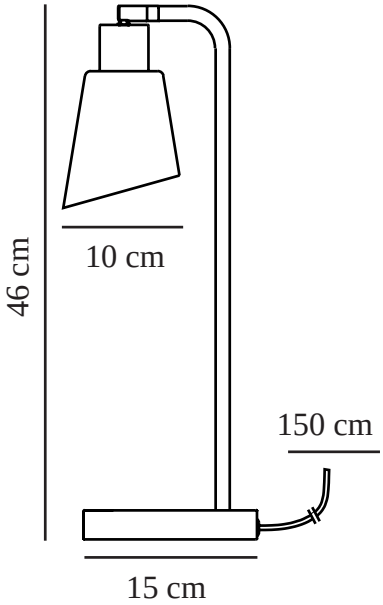

Voltage (V): 230 Volt
IP degree: IP20
Maximum bulb wattage (W): 25W
Class (Class 1, Class 2, Class 3): Class 2 (Double isolated)
Socket type: E14
Switch placement: On the fixture

Primary material: Glass
Secondary material: Metal
Colour of the cable: Black
Length of the cable (cm): 150
Surface material of the cable: Plastic
Is the cable replaceable: False
Colour: Black

Height (cm): 46
Width (cm): 15
Tube Diameter (cm): 1.27
Shade Diameter (cm): 10
Outdoor base dimension (cm): 15
Lenght (cm): 16.7
Tilt Angle (°): 90
Turning Angle (°): 350

EAN: 5704924006449
TUN: 2148735
Item Number: 2112825003
Pcs Per Master Carton: 3

Sales Box Height (cm): 47
Sales Box Width(cm): 17.5
Sales Box Depth (cm): 16.5
Sales Box Volume m³ : 0.0136
Product net weight (kg): 1.28

• Minimalist and classic design • Oblique, opal glass shade
• Adjustable lamp head for a directional light

The Molli series is a series of flexible lights in a minimalist and classic design. The oblique, matt opal white glass shade ensures a pleasant, diffused light. You can easily adjust the lamp head for a directional light.