EIK 2 | SPOT LIGHT | GREY

45770110

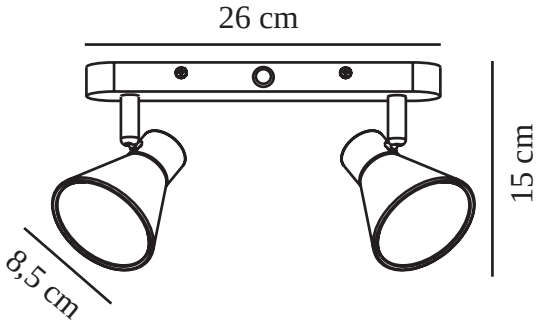

Voltage (V): 220-240 Volt
IP degree: IP20
Maximum bulb wattage (W): 35
Class (Class 1, Class 2, Class 3): Class 1 (Earth contact)
Socket type: GU10
Dimmerable: Yes with compatible bulb
Parallel connection: False

Primary material: Metal
Is the cable replaceable: False
Colour: Grey

Height (cm) : 15
Width (cm): 28.5
Shade Diameter (cm): 8.5
Lenght (cm): 28.5
Projection (cm): 15
Tilt Angle (°): 320
Turning Angle (°): 90

EAN: 5701581369788
TUN: 1902469
Item Number: 45770110
Pcs Per Master Carton: 3

Sales Box Height (cm): 27.5
Sales Box Width(cm): 14
Sales Box Depth (cm): 10
Sales Box Volume m³ : 0.0038
Product net weight (kg): 0.49

• Contemporary and simple style • Tilting and turning shade
• Can be used on both wall and ceiling

Discreet and practical spotlight fixture with two spotlights in grey. This spotlight can be placed in different locations in the home and create focus or cosiness depending on how it is placed.