ELKTON 14 | DOWNLIGHT | WHITE

47530101

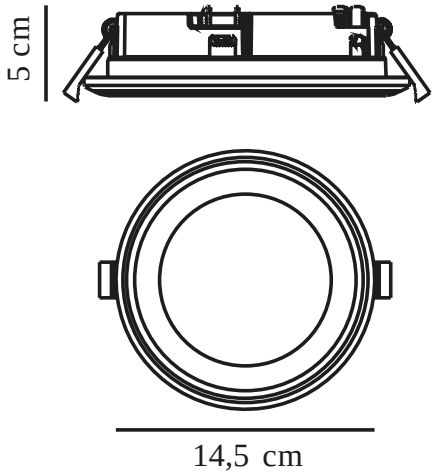

Voltage (V): 230 Volt
IP degree: IP20
Class (Class 1, Class 2, Class 3): Class 2 (Double isolated)
Socket type: LED – Non-replaceable light source
Parallel connection: True

Primary material: Plastic
Secondary material: Plastic
Colour: White

Height (cm) : 3.9
Built In Spot Diameter (cm) - Hidden: 14.5
Built In Width (cm) . Hidden: 23
Mount directly into insulation: False

EAN: 5701581414983
TUN: 1975405
Item Number: 47530101
Pcs Per Master Carton: 3

Sales Box Height (cm): 15
Sales Box Width(cm): 4.8
Sales Box Depth (cm): 15
Sales Box Volume m³ : 0.0011
Product net weight (kg): 0.225

Brightness of light (Lumen): 800
Colour temperature (Kelvin): 2700
Ra-value : 80
Lifetime (hours): 25000
Beam angle (°) : 120
Candela (cd) (for directional lamp only): 0
Energy class: F
Actual watt (W): 12

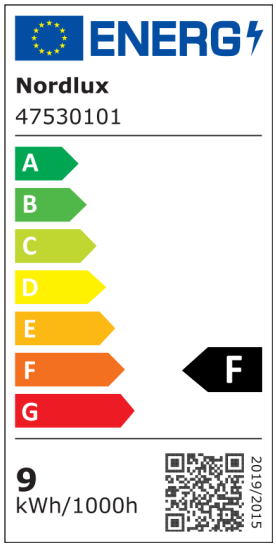

• 3-step Moodmaker™ dimming by your regular wall switch • Parallel connection possible
• Connector block included • Long LED lifespan (25,000 hours)

LED recessed spot with integrated LEDs and 3-step Moodmaker™ function. Change between 3 different light scenes with a conventional switch.