CYCLONE | CLAMP LAMP | BLACK

73072003

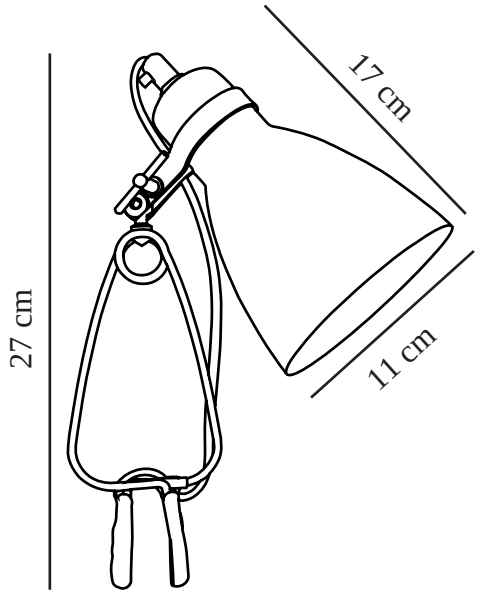

Voltage (V): 230 Volt
IP degree: IP20
Maximum bulb wattage (W): 15
Class (Class 1, Class 2, Class 3): Class 2 (Double isolated)
Socket type: E14
Dimmerable: Yes with compatible bulb
Switch placement: On the cable

Primary material: Metal
Colour of the cable: Black
Length of the cable (cm): 200
Surface material of the cable: Plastic
Is the cable replaceable: False

Colour: Black

Height (cm) : 27
Shade Diameter (cm): 11
Shade Height (cm): 17

EAN: 5701581220775
TUN: 5387145
Item Number: 73072003

Pcs Per Master Carton: 3
Sales Box Height (cm): 26
Sales Box Width(cm): 15
Sales Box Depth (cm): 12
Sales Box Volume m³ : 0.0047
Product net weight (kg): 0.416

• Contemporary classic style • Clamp for fasten on shelf or other edge
• Turnable lamp head

The Cyclone Clamp Spotlight from Nordlux with flexible arm for adjusting the lamp head. The light has a shade diameter of 11 cm and is equipped with an on/off toggle switch on the cord.